废油滑轨

灵活的废油导轨，配有使用寿命长的可清洁滤芯，为汽车维修车间打造更加安全健康的工作环境。

滑轨沿着工作坑安装，有小坡度，使废油自动流到滑轨尽头，暂时存储于一个80升的油箱。废油可排干，或注入中央废油箱。

系统不使用时，手臂装置可不再沿坑壁放置，因为臂可以旋转，收集器的高度可调。滑轨可安装有一个或多个运载装置/手臂装置。

油温:最高90° C环境温度:10 – +50 °

在加油用的地沟里有良好的移动性
易存放，以节省空间
带可调臂和收集器的运载装置
带过滤器的收集罐（可选的）

品名	废油滑轨
安装	室内
材料	铝滑轨、塑料罐、钢臂和收集器
环境温度范围	10 to +50 C (14 F to 122 F)
Further technical data	Oil temperature: max 90 ° C

This content is protected under copyright law, furnished for informational use only, and subject to change without notice. © Nederman Holding AB

废油滑轨

[image]	产品名称	重量（公斤）	产品编号
	Waste oil rail 2,5m complete	7,5 kg/m (incl brackets)	30583405
	Waste oil rail 5,0 m complete	7,5 kg/m (incl brackets)	30583406
	Waste oil rail 7,5m complete	7,5 kg/m (incl brackets)	30583407
	Waste oil rail 10m complete	7,5 kg/m (incl brackets)	30583408
	Waste oil rail 12,5m complete	7,5 kg/m (incl brackets)	30583409
	Waste oil rail 15m complete	7,5 kg/m (incl brackets)	30583410
	Waste oil rail 17,5m complete	7,5 kg/m (incl brackets)	30583411
	Waste oil rail 20m complete	7,5 kg/m (incl brackets)	30583412
	Waste oil rail 22,5m complete	7,5 kg/m (incl brackets)	30583413
	Waste oil rail 25m complete	7,5 kg/m (incl brackets)	30583414
	Collector tank including filter	11	30583404
	Pump control complete, waste oil	1,3	30583403
			30600150
			30600450
	Waste oil funnel blue		30600550

This content is protected under copyright law, furnished for informational use only, and subject to change without notice. © Nederman Holding AB

废油滑轨

[image]	产品名称	重量（公斤）	产品编号
	Waste oil arm		30600250
			30600350

This content is protected under copyright law, furnished for informational use only, and subject to change without notice. © Nederman Holding AB

废油滑轨

附件		产品编号
	毯式滤芯	30594750
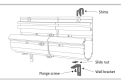	Wall shim kit	30377271

This content is protected under copyright law, furnished for informational use only, and subject to change without notice. © Nederman Holding AB

废油滑轨

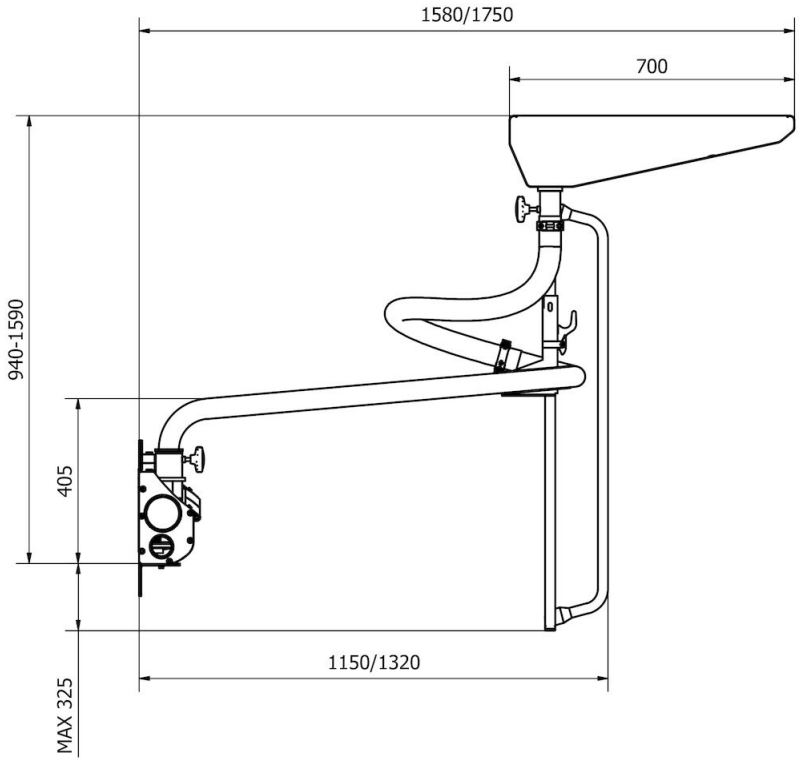

This content is protected under copyright law, furnished for informational use only, and subject to change without notice. © Nederman Holding AB

废油滑轨

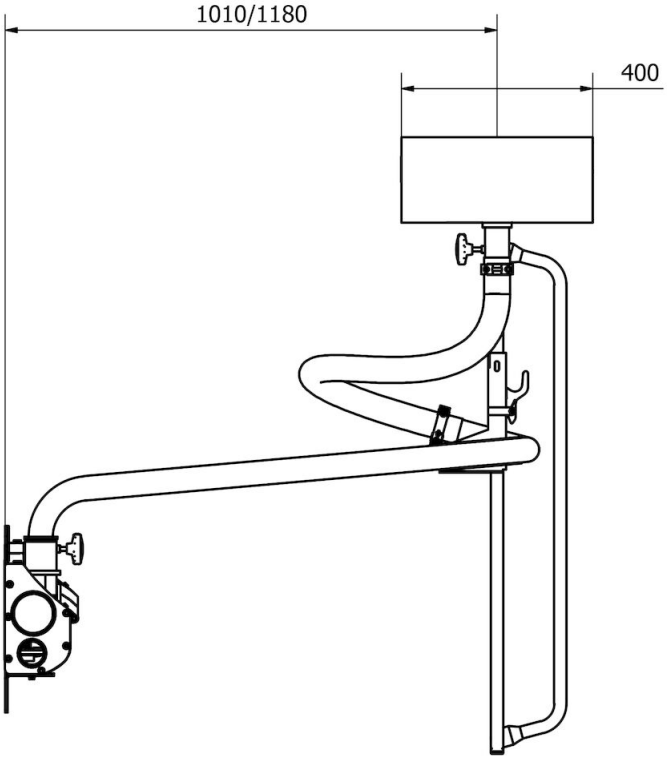

This content is protected under copyright law, furnished for informational use only, and subject to change without notice. © Nederman Holding AB