Nederman

www.nederman.com
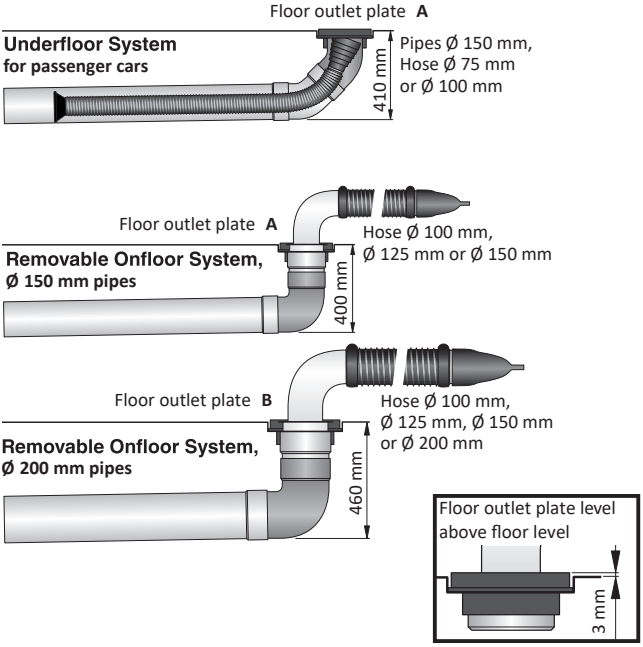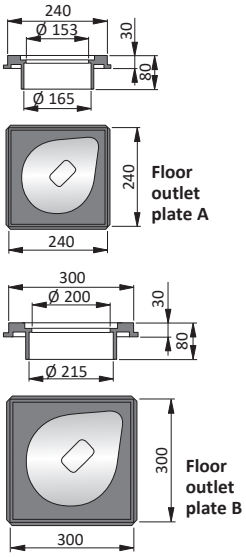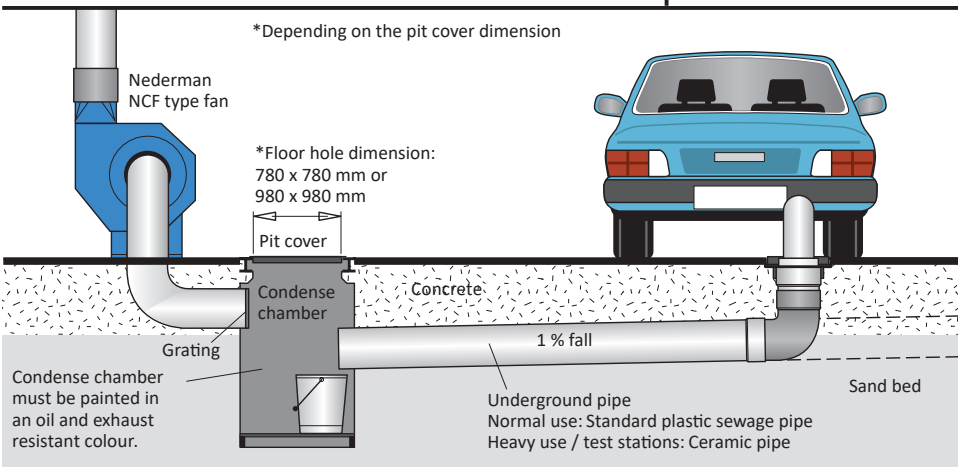
Technical Information - In-ground Exhaust Extraction Systems